No.	Specification	Unit	Q'ty	No.	Specification	Unit	Q'ty
1	M12 Female contact socket Gold Plated	pc	2~8	9	Wire locking screw Carbon steel bright Nickel	pc	2~8
2	M12 zinc alloy with hexagonal connection nut	pc	1	10	M12 Female contact socket Protective cover,black	pc	1
3	Buna-N O-ring, Ø6 ID × 1.5 CS, black	pc	1	11	Straight body zinc alloy shell	pc	1
4	Corrugated gasket manganese steel, silver	pc	1	12	Shield ring brass,PG9 specification silver	pc	1
5	Main connecting nut copper shell	pc	1	13	Buna-N O-ring, Ø9 ID × 1.5 CS, black	pc	1
6	Buna-N O-ring, Ø12.6 ID × 1.2 CS, black	pc	1	14	waterproof rubber plug Silicone Rubber PG9 black	pc	1
7	M12 Female Insulator ,black	pc	1	15	Tail paw PG9 specification black	pc	1
8	Metal assembly body liner, black	pc	1	16	Lock cable nut copper shell PG9	pc	1

CORE LAYOUT

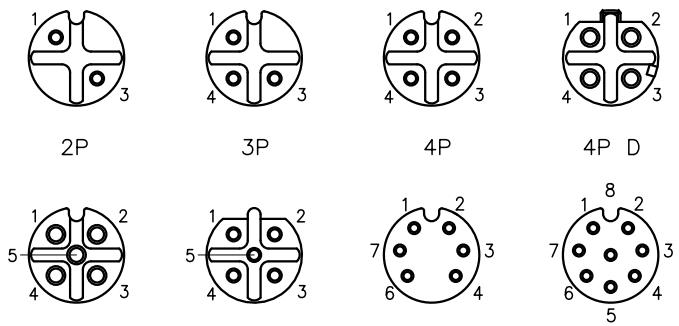

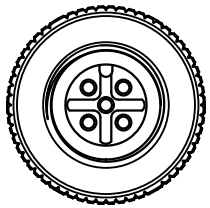

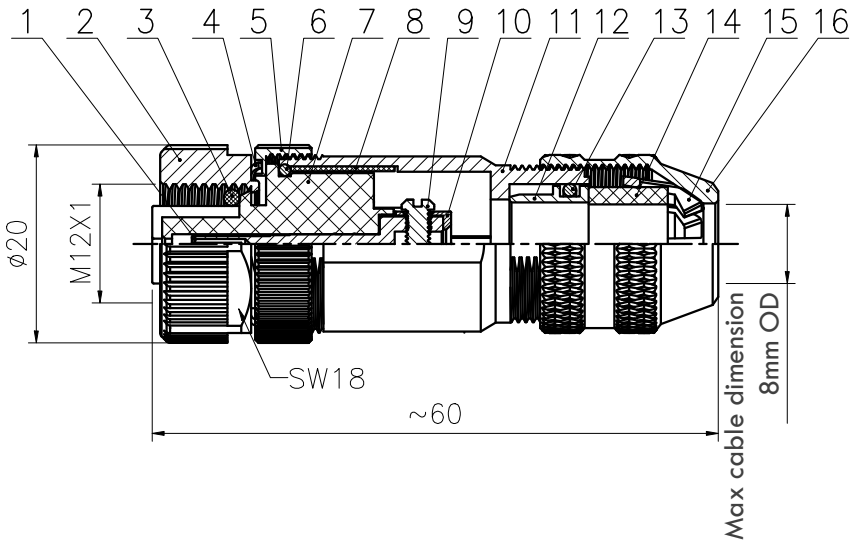

Technical specifications:

Coupling:	Threaded coupling
Termination:	Screw lock
Pollution degree:	3
Temperature range:	−40°C ~ +80°C
Degree of protection:	IP67
Mating cycles:	⩾500

Cable outlet diameter: 6.0~8.0 mm · Conductor: max 1.5 mm² (AWG 16)

PIN	2	3	4	4D	5	5B	6	8
Rated current/ voltage	4A/250V	4A/250V	4A/250V	4A/250V	4A/60V	4A/60V	2A/30V	2A/30V
Rated pulse voltage	2500V	2500V	2500V	2500V	1500V	1500V	800V	800V
Insulation resistance (MΩ)	⩾100	⩾100	⩾100	⩾100	⩾100	⩾100	⩾100	⩾100
Contact resistance (MΩ)	⩽ 5	⩽ 5	⩽ 5	⩽ 5	⩽ 5	⩽ 5	⩽ 5	⩽ 5

GENERAL TOLERANCE (UNLESS SPECIFIED)	
⩽10	±0.1
<10~⩽20	±0.2
<20~⩽50	±0.5
Angle	±1°

THIRD ANGLE

DWN	Y.Z 2026.6.15				
CHK					
APVD				TITLE	M12 Straight Female Metal Assembled Plug
UNIT	MM	REV	A	PART NO	M12-Sxx-GLAP9
SIZE	A4	SHEET	1 OF 1	DRAWING NO	M12-Sxx-GLAP9

TANNER, INC.
Wire & Cable Specialists · Avon, Ohio
tannerwire.com · (440) 808-8841